JAIDEV EDUCATION SOCIETY'S

J D COLLEGE OF ENGINEERING AND MANAGEMENT

KATOL ROAD, NAGPUR

Website: www.jdcoem.ac.in E-mail: info@jdcoem.ac.in

(An Autonomous Institute, with NAAC "A" Grade)

Affiliated to DBATU& RTMNU

Education to Eternity

B.Tech Summer / ~~Winter~~ - 2024

(ESE / ~~Make-up~~ / ~~Supplementary~~) Examination

Branch: CS/IT/AI/DS **Sem:-II** **Marks: 100**

Subject: Engineering Graphics **Subject Code: CS/IT/AI/DS2T003**

Date of Exam: 24/06/2024 **Time: 3 Hrs.**

Instructions:

1. All the questions carry marks as indicate.
2. Assume suitable data whenever necessary.
3. Illustrate your answer whenever necessary with the help of neat sketches.
4. Don't use red pen for writing the answers.
5. Read the Question paper carefully (Branch, Semester and Scheme) before attempting the questions.

COs: Students should be able to:

1. Define various concepts like dimensioning, conventions and standards related to engineering graphics in order to become professionally efficient.
2. Interpret drawings of simple machine component in first and third angle of projection systems
3. Apply theory of projections in projection of lines, projection of planes and projection of solid.
4. Classify solid geometry in different positions.
5. Assess the two dimensional and three dimensional drawing in CAD software.
6. Create the three dimensional engineering objects into two dimensional drawings and vice versa using CAD software.

PART A

Q. No.	Solve the two words or two sentences (All Questions are compulsory).	Bloom's Level and CO	Marks
1.	Show a horizontal line segment of 80 mm length into 6 equal parts.	L1/CO1	2
2.	Enlist the use of Hidden line with neat sketch.	L2/CO2	2
3.	Show perpendicular bisector of 65mm line	L1/CO1	2
4.	State the different types of scales.	L2/CO2	2
5.	Show the projection of point A is 20 mm above HP & 30 mm in front of VP.	L1/CO1	2
6.	Select the correct option, The title block on drawing sheet is drawn in a) RHS, bottom corner, b) RHS, top corner, c) LHS, top corner	L2/CO2	2
7.	Enlist the types of drawing instruments used in engineering graphics.	L1/CO1	2
8.	Show conventional representation of glass.	L2/CO2	2
9.	State the use of long dashed dotted line.	L1/CO1	2
10.	Tell the internal angle of regular pentagon and regular hexagon.	L2/CO2	2
11.	Enlist the various types of CAD software	L1/CO1	2
12.	State the CATIA software tool symbol of Quick Trim and Mirror.	L2/CO2	2

PART B

Q. No.	Solve the following Descriptive Type Questions (All Questions are compulsory).	Bloom's Level and CO	Marks
13.	Build a regular pentagon of 40 mm side.	L3/CO3	4
14.	Construct a projection of a square plane with a 40mm side and 20mm above the HP, when (a) A side is inclined at 30° to VP and (c) All sides are equally inclined to VP.	L3/CO3	4
15.	Draw an isometric view of Cone with a base diameter is 50 mm side and 70mm long axis (a) when the base is on the HP	L3/CO3	4
16.	Construct the projections of 70mm long line AB situated in the V.P and inclined at 30° to H.P. The end A is 25 mm above H.P.	L4/CO4	4
17.	Build a regular hexagon of 35 mm side.	L4/CO4	4
18.	Construct only FV in the direction of X.	L4/CO4	4

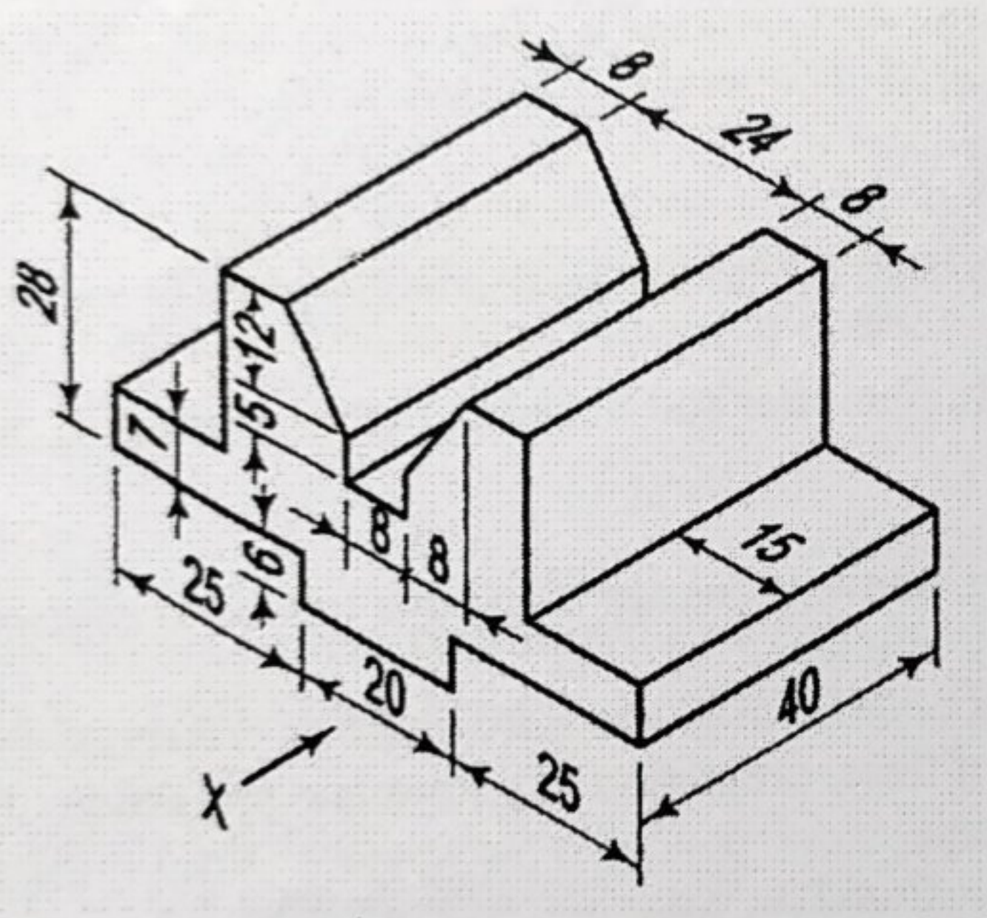

PART C

Q. No.	Solve the following Descriptive Type Questions (Solve any 4 out of 6).	Bloom's Level and CO	Marks
19.	Construct projections of a Hexagonal plate with a 30mm side and negligible thickness has its surface perpendicular to the HP and inclined at 45^0 to the VP. When one of its sides of the Plane is Parallel to and 15 mm in front of the VP.	L4/CO4	7
20.	Construct projections of a regular pentagon of 30 mm sides is resting on HP on one of its sides while it's opposite vertex (corner) is 30 mm above HP. The side in HP is 30^0 inclined to VP.	L4/CO4	7
21.	Discover a projection of hexagonal prism having a base with a30 mm side and 75 mm long axis, has an edge its base on the HP. Its axis is Parallel to the VP and inclined at 45° to the HP.	L5/CO5	7
22.	Build the orthographic projection, FV in the direction of X and TV	L5/CO5	7

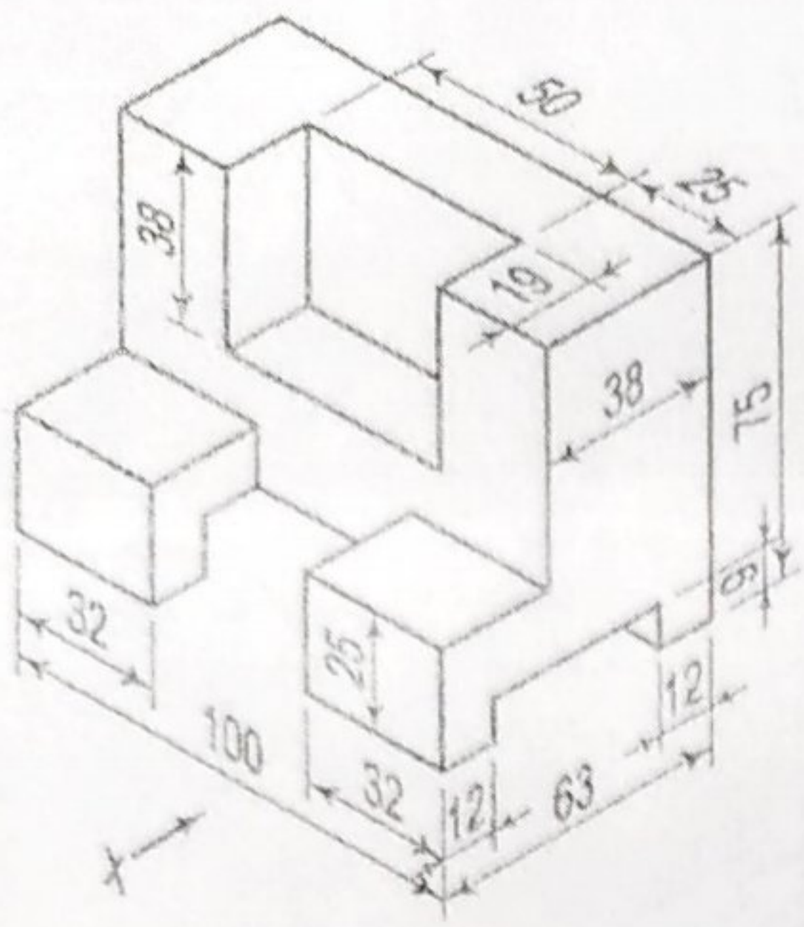

23.	Construct the projections of line AB and determine its inclination with HP and VP when the top view of a 75mm long line AB measures 65mm, while its front view measures 50mm. Its one end A is in HP and12mm in front of VP.	L6/CO6	7
24.	Draw isometric view of a hexagonal prism having a base with 30 mm side and a 70mm long axis resting on its base on the HP.	L6/CO6	7

PART D

Q. No.	**Solve the following Descriptive Type Questions (Solve any 2 out of 3).**	**Bloom's Level and CO**	**Marks**
25.	Build a projection of cone 40 mm diameter and 50 mm axis is resting on one of its generator on HP which makes 30^0 inclinations with VP.	L4/CO4	12
26.	Discover the isometric projection of following figure.	L5/CO5	12

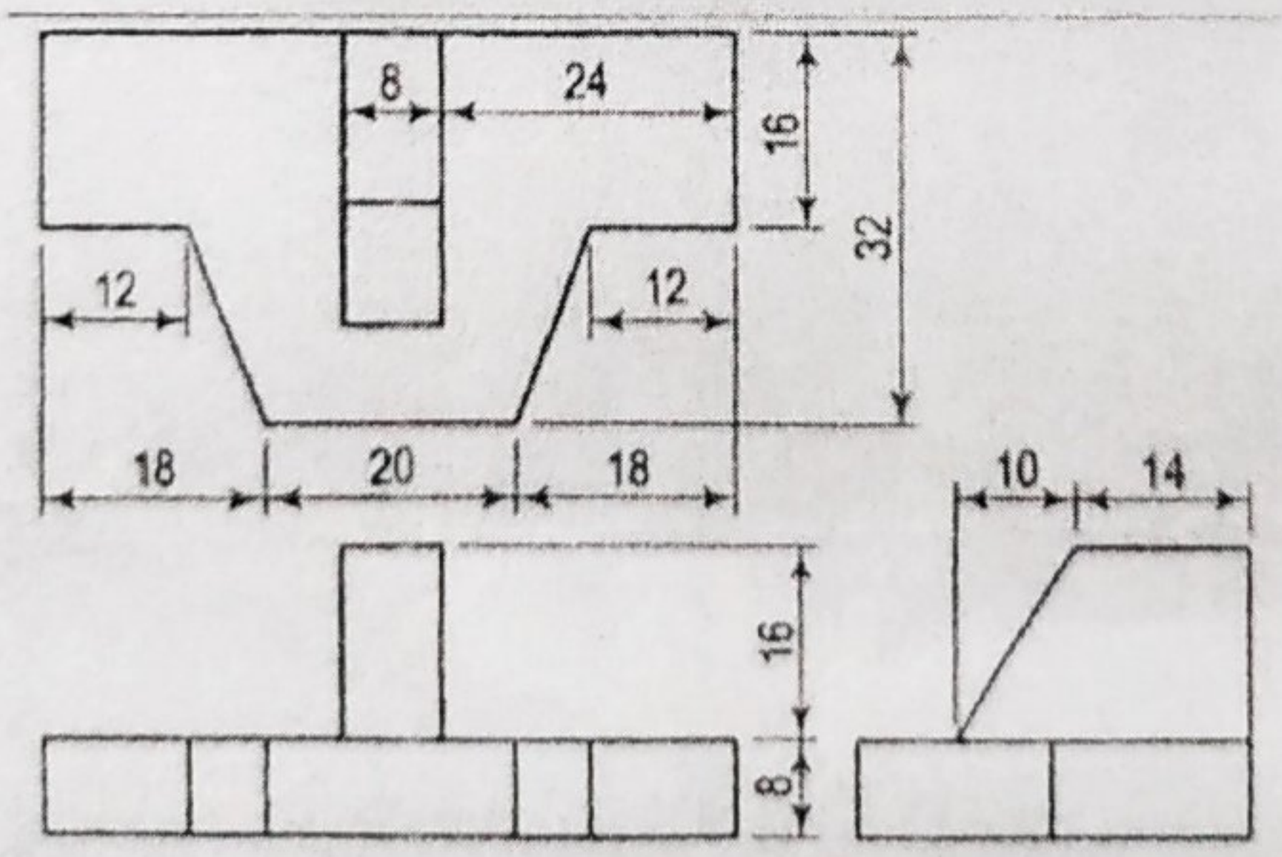

27.	Discover the isometric projection of following figure.	L6/CO6	12

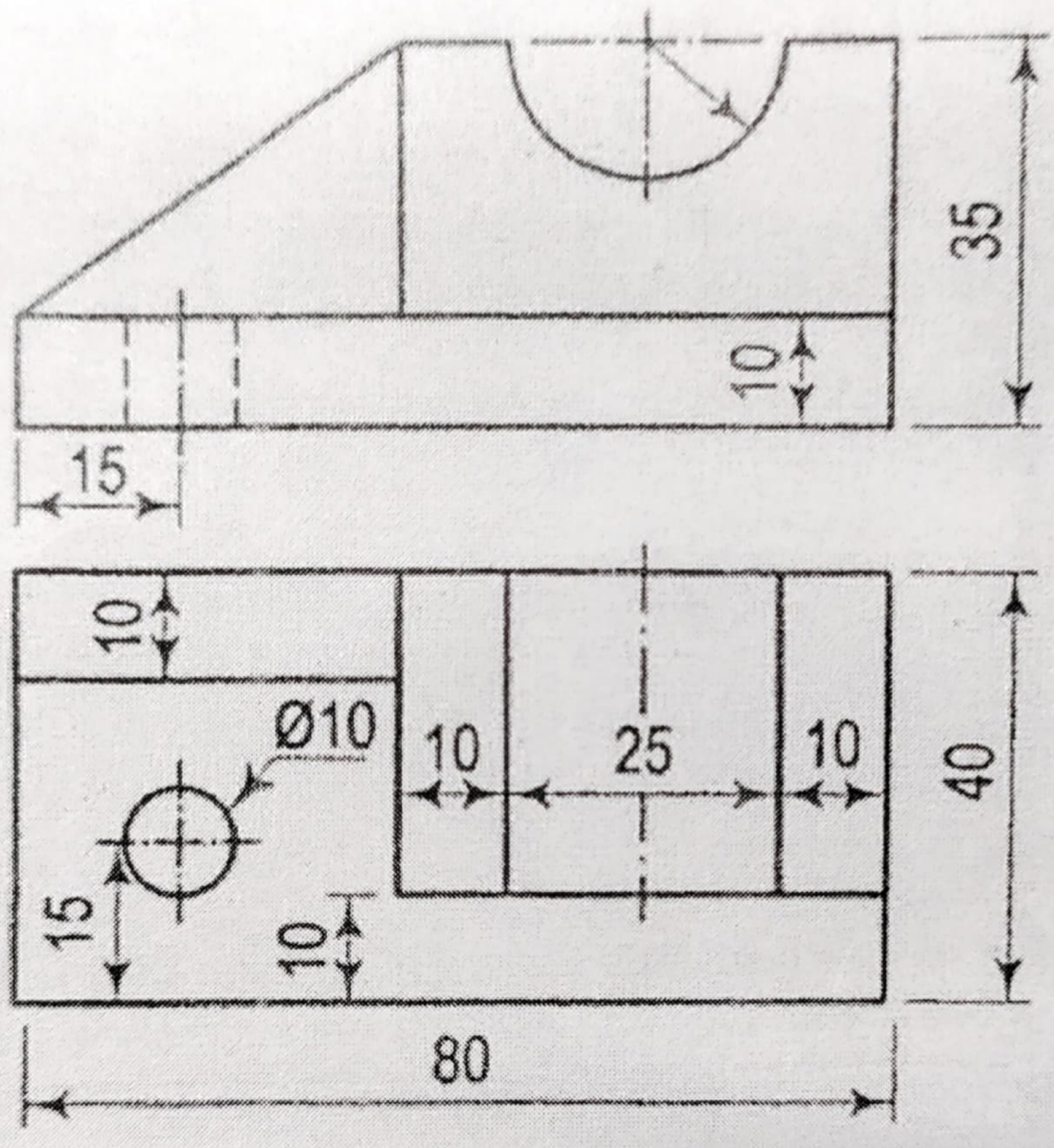
35
10
15
10
Ø10
10
25
10
40
15
10
80